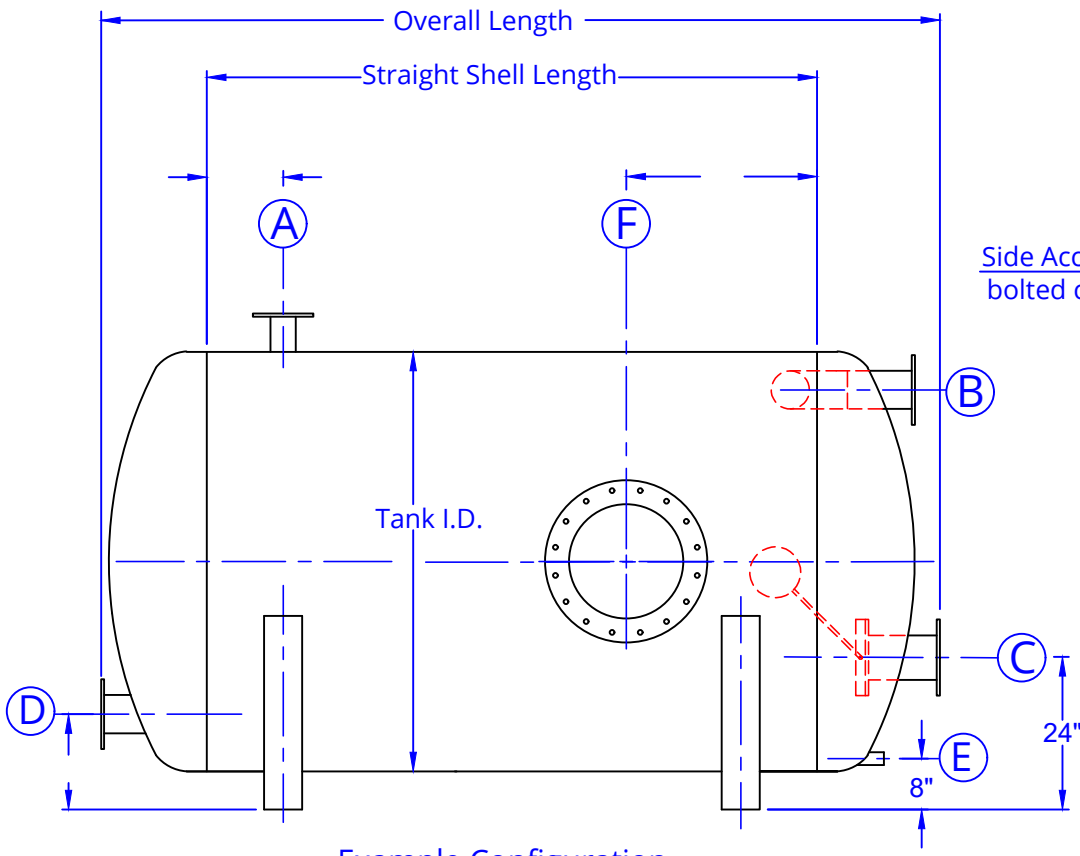

Example Configuration

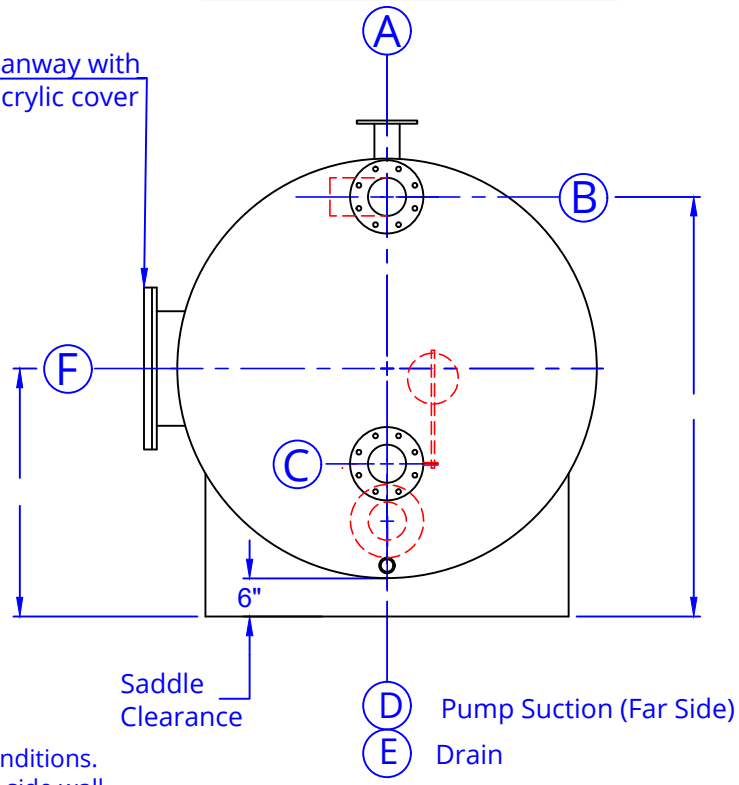

Saddle Details:

- Base tank uses two saddles.
- Saddles permanently bonded to exterior.
- Saddle height = 6" clearance above floor.
- Contact surface is 120°.

Comments:

- Fittings may be located as required by site conditions. Fittings may be located on top, on domes, on side wall.
- Additional fittings may be requested.
- Surge capacity calculated based on elevation shown. Change in elevation will modify surge capacity.

Total Capacity: Gallons
Calculated Surge Capacity: Gallons

Mark	ID	OD	BC	Holes	Hole Ø	Thk.	Description
A							Vent
B							Gutter w/ elbow
C							Main Drain
		Float Valve Installed in tank:					
D							Pump Suction
E	2"	Threaded PVC Coupling					Drain
F							Manway & Cover

MER-MADE FILTER
PO Box 306 Denmark, SC 29042
P: 803-793-4265 F: 803-793-4332

Customer:

Project:

Horizontal Surge Tank

Dwg. T-14395
Date: 10-08-21