NOTES

1. STRAINER BODY: FIBERGLASS CONSTRUCTION USING ISOPHTHALIC POLYESTER RESIN AND A .100" THK. CORROSION LINER USING ONE LAYER C GLASS AND TWO LAYERS CHOPPED STRAND MAT.
2. LID: CLEAR ACRYLIC
3. TOGGLE BOLTS: STAINLESS STEEL
4. HAND KNOBS: ABS WITH BRASS INSERTS
5. O-RING: ETHYLENE PROPYLENE
6. BASKET: 316 STAINLESS STEEL WEDGE WIRE, 3/16" SQ. OPENING

-INLET AND OUTLET FLANGES SHALL HAVE 150# ANSI STANDARD DRILL PATTERNS

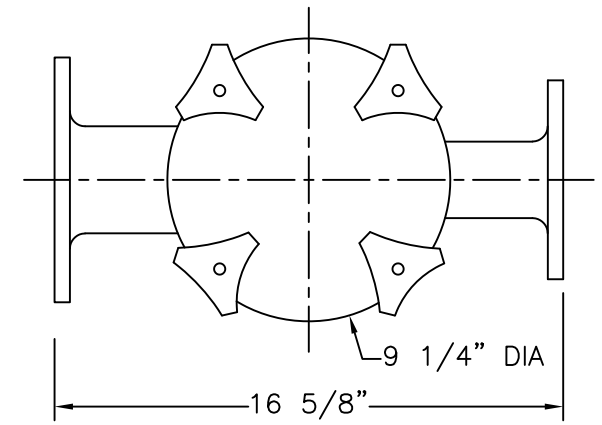

TOP VIEW

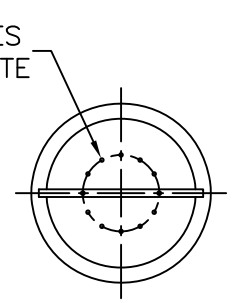

TOP VIEW

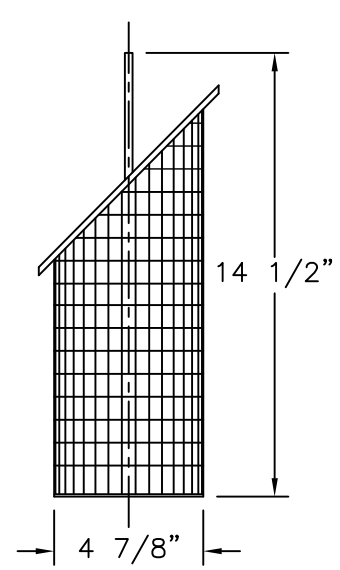

BASKET DETAIL

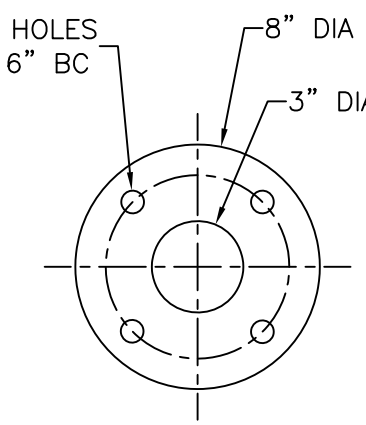

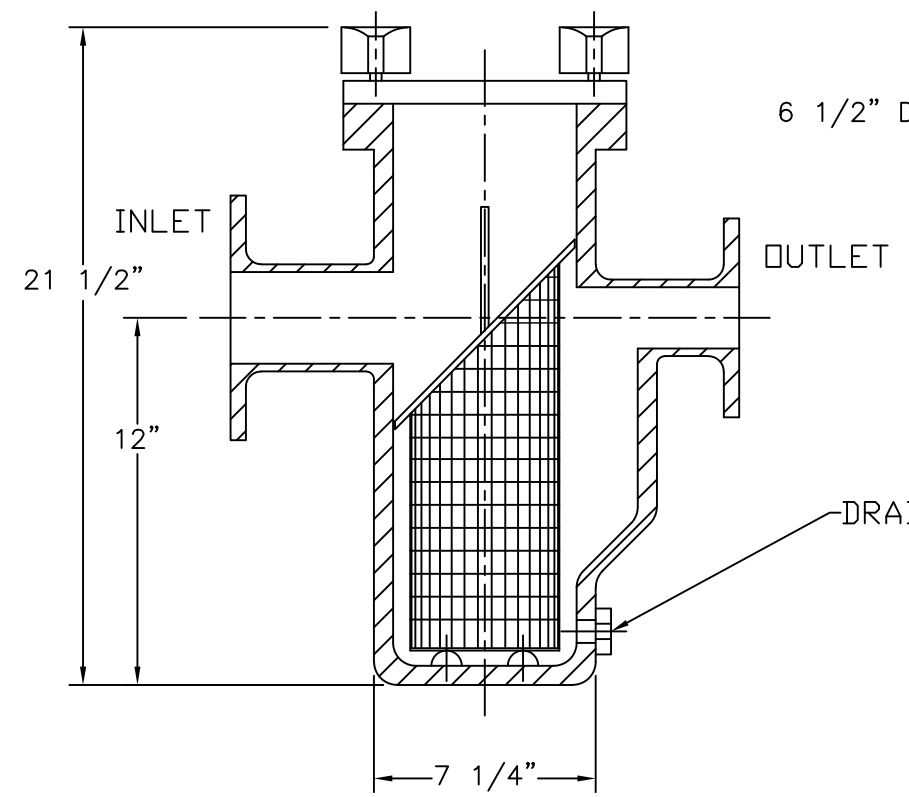

HOUSING DETAIL

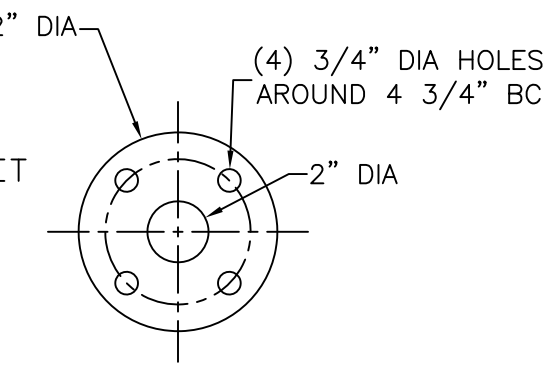

CERTIFIED FOR PRODUCTION

BY: _____ DATE: _____

MER-MADE, INC.

THIS DRAWING CONTAINS INFORMATION PROPRIETARY TO MER-MADE FILTER INCORPORATED. IT IS SUMITTED IN CONFIDENCE AND IS TO USED SOLEY FOR THE PURPOSE FOR WHICH IT IS FURNISHED AND IS TO BE RETURNED UPON REQUEST. THIS DRAWING AND SUCH INFORMATION IS NOT TO BE REPRODUCED, TRANSMITTED, DISCLOSED, OR USED OTHERWISE IN WHOLE OR IN PART WITHOUT THE WRITTEN AUTHORIZATION OF MER-MADE FILTER INCORPORATED.

TOLERANCES UNLESS OTHERWISE SPECIFIED

MACHINED DIMENSIONS:

X.X	±.020	FINISH:	125
X.XX	±.010	ANGLES:	±2°
X.XXX	±.005	RADII:	±.03

FRACTIONAL DIMENSIONS:

1/X ±1/8

REMOVE ALL BURRS AND BREAK ALL SHARP EDGES: .016 x 45°

REV	DESCRIPTION	DATE

MER-MADE
PO BOX 306
DENMARK, SC 29042
P:803-793-4263 F:803-793-4265

3" X 2" REDUCING FO SERIES BASKET STRAINER

SIZE	DWN BY: SJV	DWG NO.	REV
B	CHK BY:	M-0234	R0
SCALE: NTS	DATE: 06/17/21	Sheet: 1 OF 1	